[illegible]1[illegible]RH[illegible]T[illegible]SE-RHT05

pRoduct[illegible]

RHT05[illegible]

[illegible]OTP[illegible]

[illegible]

[illegible]20m[illegible]rht05[illegible] [illegible]

[illegible]

[illegible]

□□□□□□

□□□ 3.3-5.5V DC

□□□□□ □□□□□□□□□□□□□□□□□

□□□□□ □□0-100□RH□□□-40□+80℃

□□□□□□ ±3□RH

□□□□□±0.5℃

□□□□ □□0.1□RH□ □□0.1℃

□□□□ □□±1□/□□□□±0.2°/□

□□□□□ □□□<5s

□□□□□□ □□□□□□□□

□□ □□□□□□

TEMPERATURE
HUMIDITY
GAS

AM2315C

Temperature Range：- 40 ~ + 80°C
Humidity Range：0 ~ 100 %RH
Temperature Accuracy：± 0.3°C
Supply Voltage：3.3 ~ 5.5 V
Humidity Accuracy：± 2 %RH (25°C)
Output Signal：1-Wire

[illegible]

HVAC[illegible]

Home Appliances
HVAC
Dehumidification Equipment
Automobiles
Weather Stations
Automatic Control
Medical
AM2315C

3. [illegible]

[illegible]

Parameter	Condition	MIN	TYP	MAX	Unit
Interface	one wire	-	one wire	-	-
Supply Voltage	-		3.3	5.5	V
Temperature Range	-	-40	-	+80	℃
Humidity Range	-	0	-	99.9	%RH
Temperature Accuracy	-	-	±0.3	-	℃
Humidity Accuracy	-	-	±2	-	%RH
Response time	τ 63%	-	8	-	s
Prolonged Drift (Temp)	-	-	<0.1	-	℃/yr
Prolonged Drift (Hum)	-	-	<1	-	%RH/yr

Characteristic Table

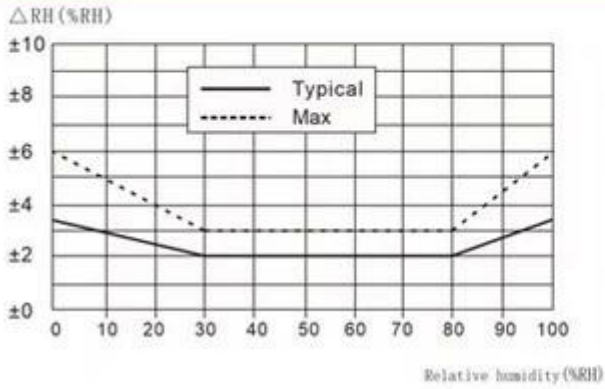

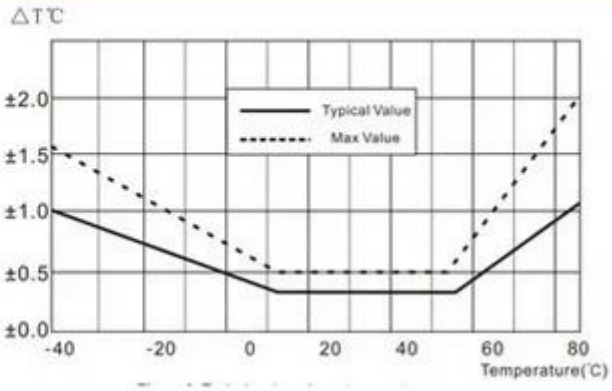

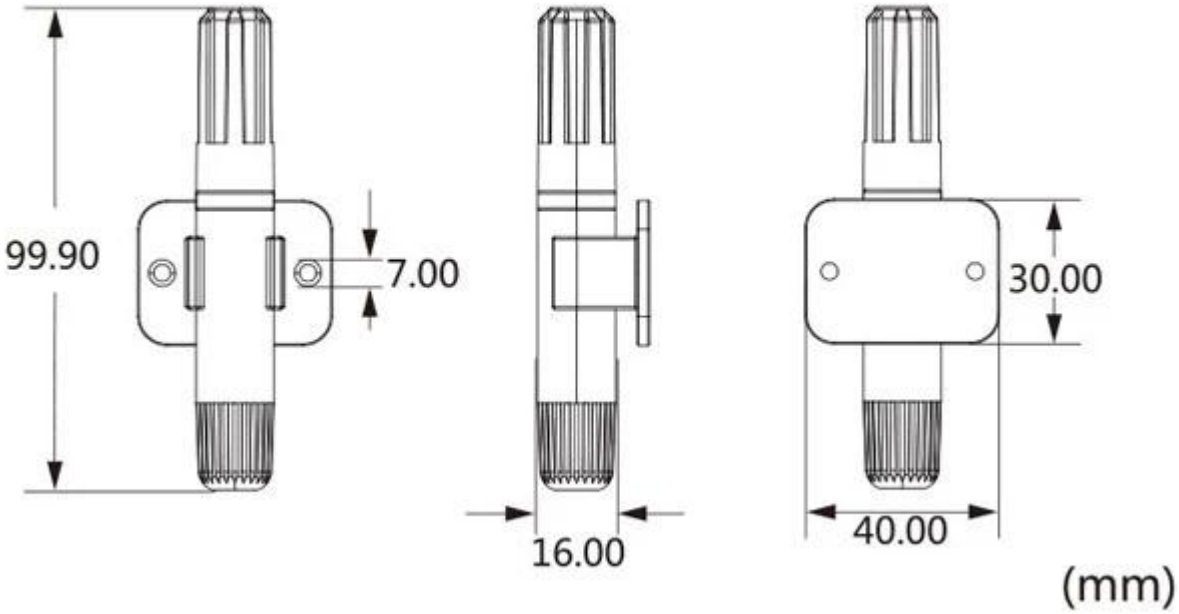

AV2385

□□□□□

QUALITY MANAGEMENT SYSTEM
CERTIFICATE

We hereby certify that
Zhejiang New-epoch Communication Facility Co., Ltd
Sebetech Electronics co.,Ltd

Quality Management System
ISO9001: 2008
GB/T 19001-2008

CHINA QUALITY CERTIFICATION CENTRE

Union Safety Certification Service

EC Declaration of Conformity

EN60335-1:2012
EN62233:2008

Applicant : Sebetech Electronics co.,Ltd
Address : No.56, Renhe Road, Renhe Town, Baiyun District, Guangzhou, China
Product : Humidity & temp Sensor
Model No. : AM2301/AM2302/AM2303/AM2305/AM2306/AM2321
Input Ratings : 3.5-5.5V
Ref. Test Report : 16002461 001

CE

Manager

Union Safety Certification Service

Declaration of Compliance

Applicant : Sebetech Electronics co.,Ltd
Address : No.56, Renhe Road, Renhe Town, Baiyun District, Guangzhou, China
Product : Humidity & temp Sensor
Model No. : AM2301/AM2302/AM2303/AM2305/AM2306/AM2321
Input Ratings : 3.5-5.5V
Ref. Test Report : 16002463 001

RoHS

[illegible]

1. 2005[illegible]10[illegible]
2.[illegible]
3. ISO9001[illegible]UL[illegible]CE[illegible]SGS[illegible]EMC[illegible]CQC[illegible]REACH[illegible]
4.[illegible]1[illegible]
5.[illegible]1[illegible]PCS/ 1[illegible]
6.[illegible]50[illegible]
7. 20[illegible]
8.[illegible]

Order program