Telefonkabel Untangler US-07L

Produkt-Eigenschaften:

* Verwenden Sie am Mobilteil die Drehung um 360 Grad Hörer Chaos und Twist zu vermeiden.
* Verbesserung der Arbeitseffizienz
* Verschiedene Farben zur Verfügung
* Telefon Stand-by-Zeit verlängern
* Neuer Entwurf mit Kunden Logo-Druck.
* RoHS komplettd

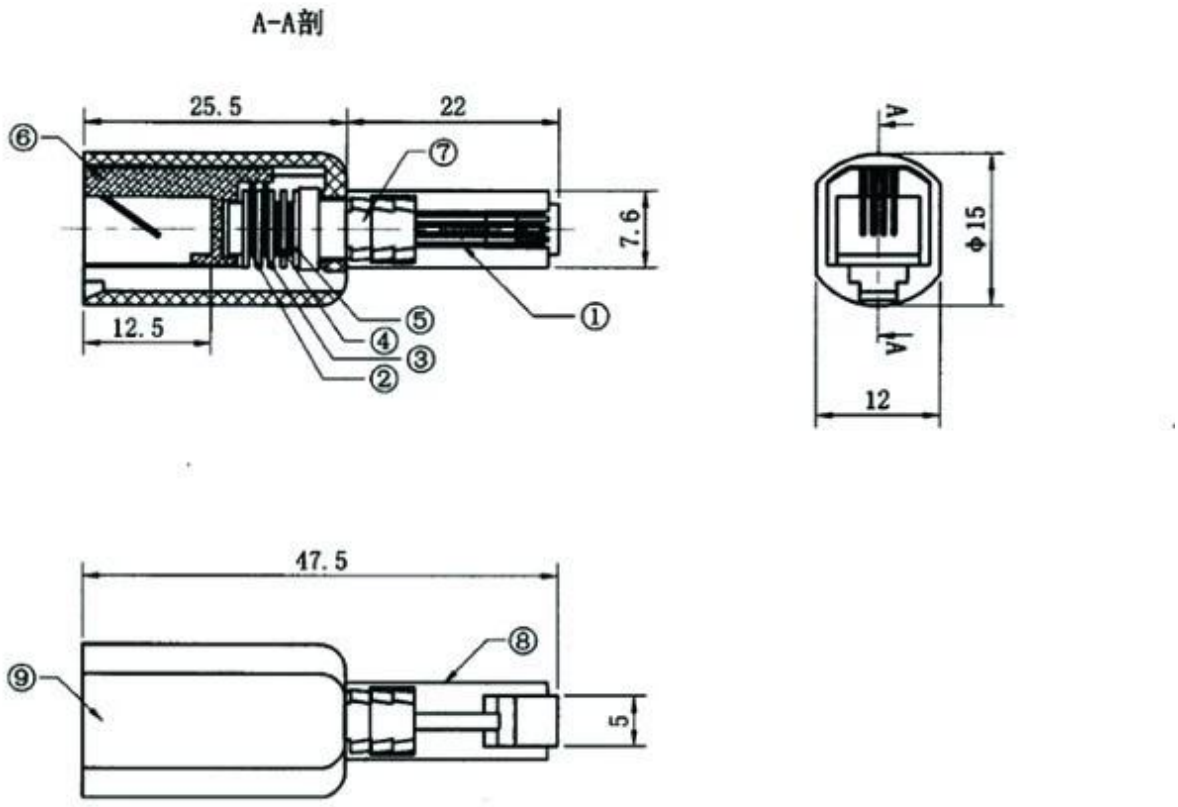

SPecs & amp; Beschreibung:

* Typ: RJ11 4p4c,
* Vergolden: 3U / 15u '/ 30u "/ 50u'
* Lange Grifflänge: 22mm
* Verschiedene Farben zur Verfügung
* Neuer Entwurf mit Kunden Logo-Druck.
* RoHS abgeschlossen

Produktverpackung:

* 1pcs / PE-Beutel
* 100pcs / box
* 1000pcs / 1000pcs / Karton;
* Kartongröße: 38x28x38cm;
* N.W: 7.5KG
* G.W: 9.5KG

Bestellhinweis:

No.	Product Photos	Model NO.	No.	Product Photos	Model NO.	Ctn size	N.W/G.W	Packing
1		SE-US07L Long Handle Length:22mm	3		SE-US-07C Wire Length:30mm	38x28x38	6.5/5.5kg	1k/ctn
2		SE-US07B Short handle Length:15.6mm	4		SE-US-06C handle Length:14.5mm	38x28x38	7.5/8.5kg	1k/ctn
5		SE-US06B Long handle Length:19.8mm	6		SE-US06 Short handle Length:15.3mm	38x28x38	7.5/8.5kg	1k/ctn
7		SE-US-81 handle Length:20.4mm	7		SE-US-81 handle Length:20.4mm	38x28x38	7.5/8.5kg	1k/ctn

Why Choose US :

Our goal is to provide customers products of high quality, competitive price, and superior services.

1.Established in 2005, about 10 years of history;

2.Own main factories, supply diversification products and One stop service

3.Certificates of ISO9001, UL, CE, EMC,CQC,RoHS,Reach,etc.

4.Six years Gold member in Alibaba, Aliexpress etc

5.Production capability more than 100 thousands pcs/ month;

6.Monthly export more than 50 times delivery;

7.Exported to more than 20 countries and regions;

8.We provide an excellent combination between prices, quality & respond,delivery,after-sales!