**□□□□□□□□□□□□□□□□□□1□□□□□□RH□T□□□□□□□□□□SE-RHT05**

## pRoduct□□□

RHT05□□□□□□□□□□□□□□□□□□

## □□□□□□

□□□ 3.3-5.5V DC

□□□□□ □□□□□□□□□□□□□□□□□

□□□□□ □□0-100□RH□□□-40□+80℃

□□□□□□ ±3□RH

□□□□□±0.5℃

□□□□ □□0.1□RH□ □□0.1℃

□□□□ □□±1□/□□□□±0.2°/□

□□□□□ □□□<5s

□□□□□□ □□□□□□□□

□□ □□□□□□

TEMPERATURE
HUMIDITY
GAS

AM2315C

Temperature Range: - 40 ~ + 80°C
Humidity Range: 0 ~ 100 %RH
Temperature Accuracy:
± 0.3°C
Supply Voltage: 3.3 ~ 5.5 V
Humidity Accuracy:
± 2 %RH (25°C)
Output Signal:
1-Wire

□□□□□□□□□□□□

HVAC□□□□□□□□□□□□

Home Appliances
HVAC
Automobiles
Dehumidification Equipment
Weather Stations
Automatic Control
Medical

**3.□□□□□□□□□**

□□□□□□□□□

| Parameter | Condition | MIN | TYP | MAX | Unit |
|---|---|---|---|---|---|
| Interface | one wire | - | one wire | - | - |
| Supply Voltage | - | | 3.3 | 5.5 | V |
| Temperature Range | - | -40 | - | +80 | ℃ |
| Humidity Range | - | 0 | - | 99.9 | %RH |
| Temperature Accuracy | - | - | ±0.3 | - | ℃ |
| Humidity Accuracy | - | - | ±2 | - | %RH |
| Response time | τ 63% | - | 8 | - | s |
| Prolonged Drift (Temp) | - | - | <0.1 | - | ℃/yr |
| Prolonged Drift (Hum) | - | - | <1 | - | %RH/yr |

## Characteristic Table

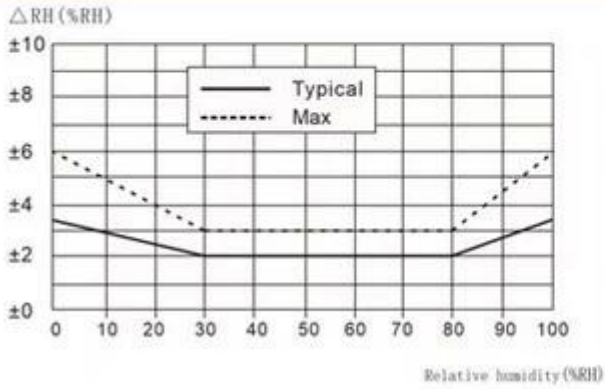


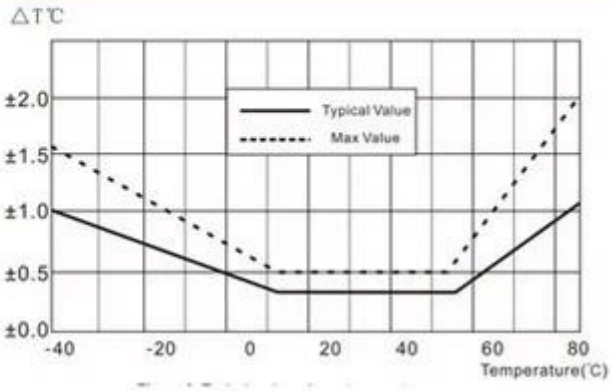


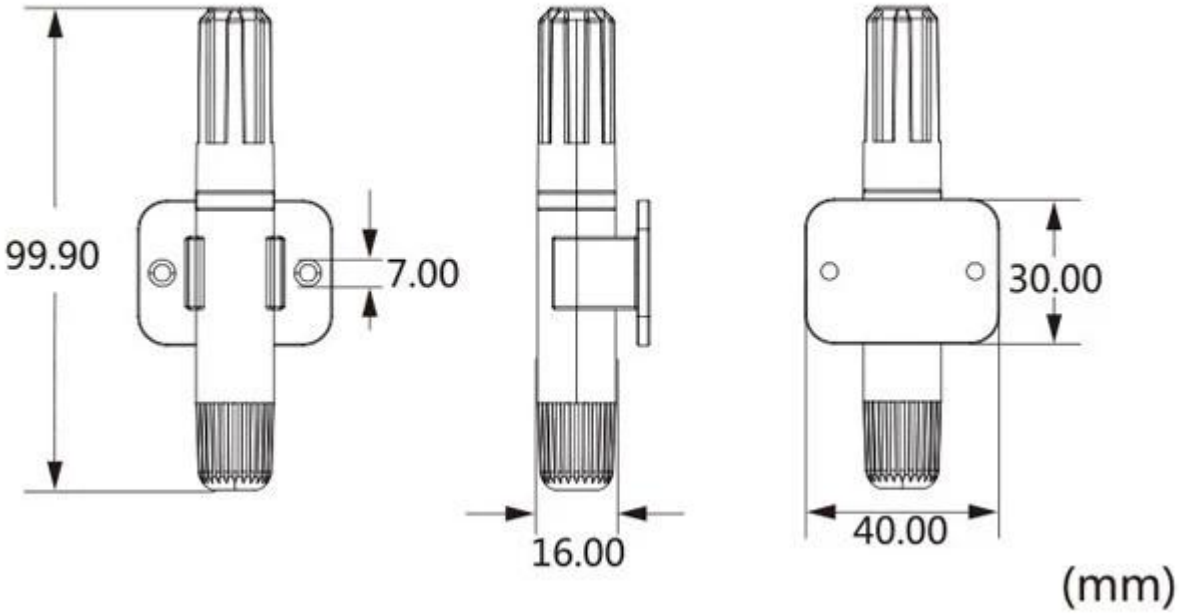

AV2385

□□□□□

## □□□□□□□□□□□□

1. 2005□□□10□□□□□□□□
2.□□□□□□□□□□□□□□□□□□□□□□□□□□□□□□□□□□□□
3. ISO9001□UL□CE□SGS□EMC□CQC□REACH□□□□□
4.□□□□□□□□□□□□□□□□□1□□□□□□□□
5.□□□□1□PCS/ 1□□□□□
6.□□50□□□□□□□□□□□□□□
7. 20□□□□□□□□□□□□□□□□□□
8.□□□□□□□□□□□□□□□□□□□

# Order program