□□ □□ untangler □□ □□ □ US-07C

□□ □□:

* □□□ □□□ □□□□ □□□□ □□ □□□□ □□□□□.

* □□ □□ □□

* □□□ □□□ □□□ □

* □□ □□ □□□□ □□

* □□□ □□ □□□ □□ □□□.

* RoHS □□ □□□

□□□□ & A; □□:

* □□ □□□ □□ : 30MM
* □□ : 4p4c,
* □□ □□ : 3U '/ 15U "/ 30U"/ 50U'
* □□□ □□□ □□□ □
* □□ □□ □□□□ □□
* □□□ □□ □□□ □□ □□□.
* RoHS □□ □□

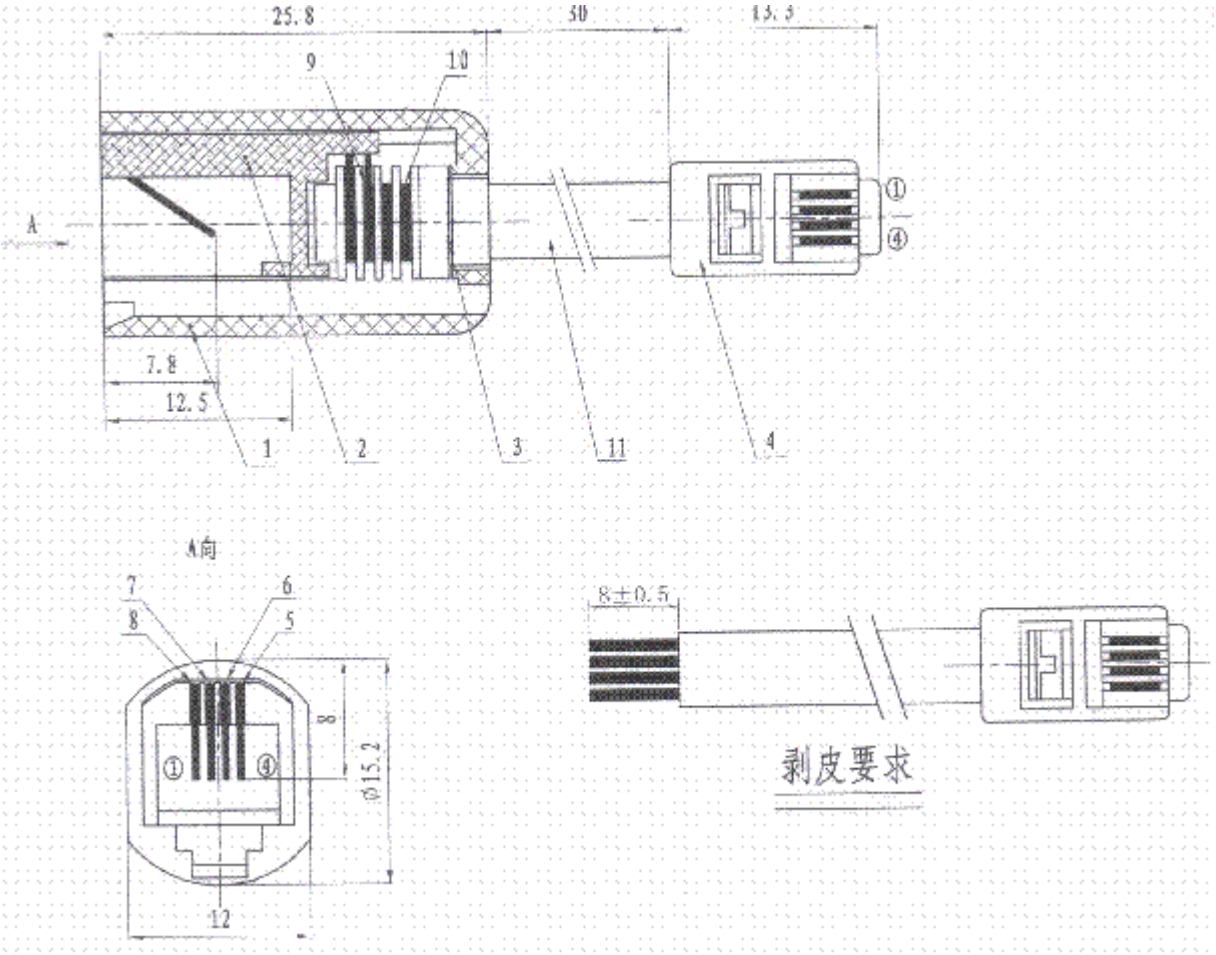

□□□ □□ :

* 1PCS / PE □□

* 100PCS / □□

* 1000PCS / 1000PCS / □□;

* □□ □□ : 38x28x38cm;

* N.W : 7.5KG

* G.W : 9.5KG

Why Choose US :

Our goal is to provide customers products of high quality, competitive price, and superior services.

1.Established in 2005, about 10 years of history;

2.Own main factories, supply diversification products and One stop service

3.Certificates of ISO9001, UL, CE, EMC,CQC,RoHS,Reach,etc.

4.Six years Gold member in Alibaba, Aliexpress etc

5.Production capability more than 100 thousands pcs/ month;

6.Monthly export more than 50 times delivery;

7.Exported to more than 20 countries and regions;

8.We provide an excellent combination between prices, quality & respond,delivery,after-sales!