Snelladen Type-C PD met USB-stopcontactenladers

Type-C PD Charger

Wall Outlet

Product introduction

- Rohs compliant
- Compact package
- Ease of installation
- High quality
- Optimum performance
- FCC+ETL

SPECIFICATIONS

Model: XS-US-008-PD1

Input : 125V 60Hz

Output : US power socket+USB+Type-C

Color : white

Size : 103*45*45.5mm

Weight : 135g

Kenmerken:

1.Shell is gemaakt van hoogwaardig brandvertragend PC-materiaal, aan de Europese milieuvereisten, brandend niet-toxisch.

2. binnenkant materiaal is gemaakt van tin fosforbrons, met goede elektrische

geleidbaarheid, niet gemakkelijk vervormd.
3. Stel het laadvermogen van de auto automatisch in.
4.USB opladen en Type C-interface, ondersteuning PD snel opladen, meer USB-apparaten en mobiele telefoon op te laden op hetzelfde moment.
6.USB uitgangsstroom 2400 mA, kan de oplaadtijd verkorten.
7. Compatibiliteit: iPod, iPhone, iPad, tablets, mobiele telefoons, MP3 Bluetooth Headsets, GPS & meer.

Plane drawing

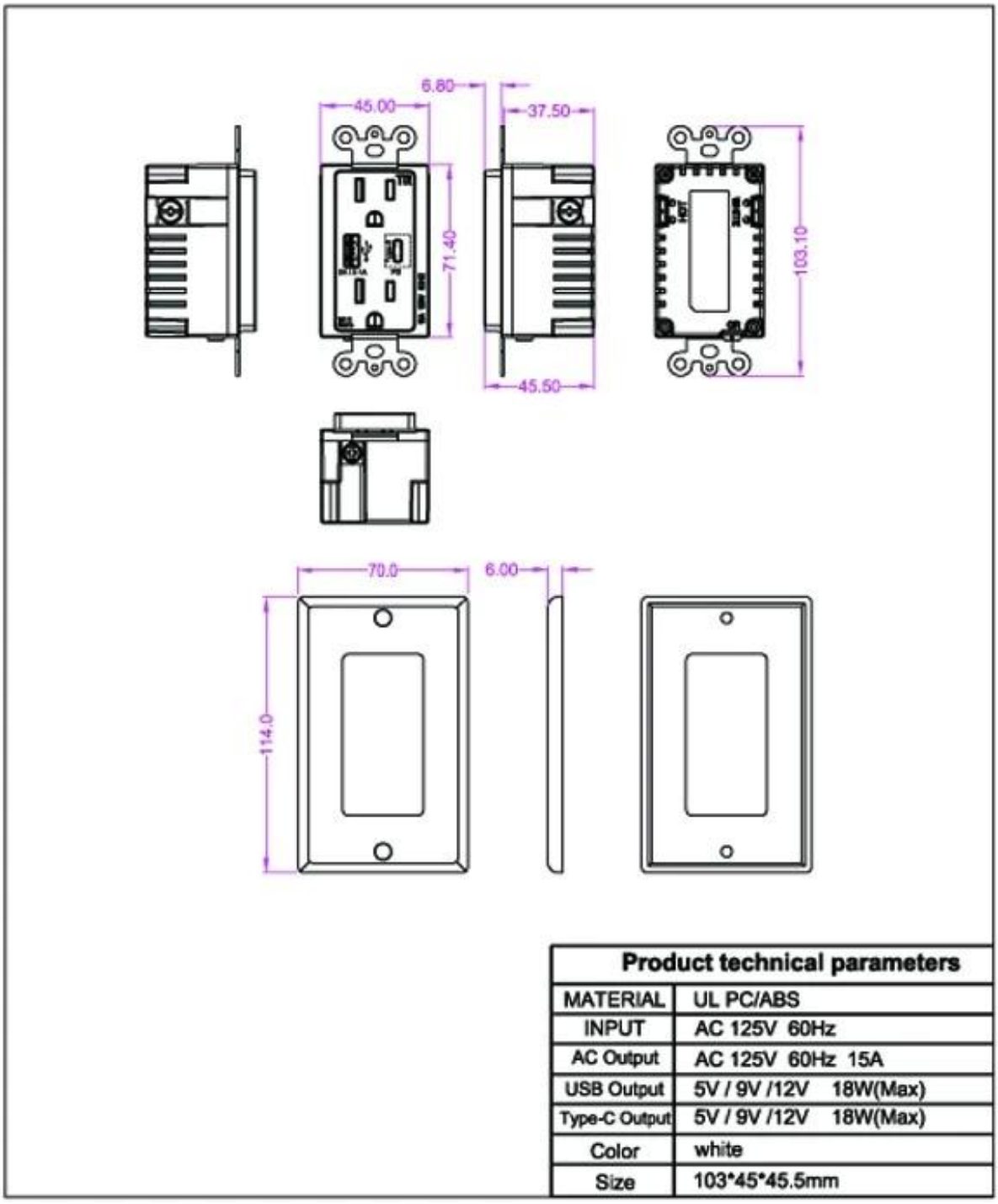

Product technical parameters	
MATERIAL	UL PC/ABS
INPUT	AC 125V 60Hz
AC Output	AC 125V 60Hz 15A
USB Output	5V / 9V /12V 18W(Max)
Type-C Output	5V / 9V /12V 18W(Max)
Color	white
Size	103*45*45.5mm

Assembly Instructions

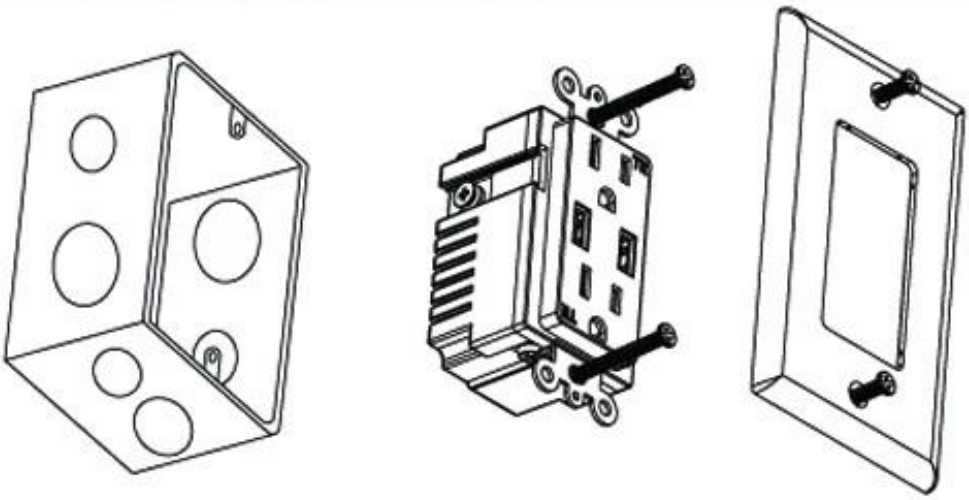

Functions indicator diagram&Wiring Diagram

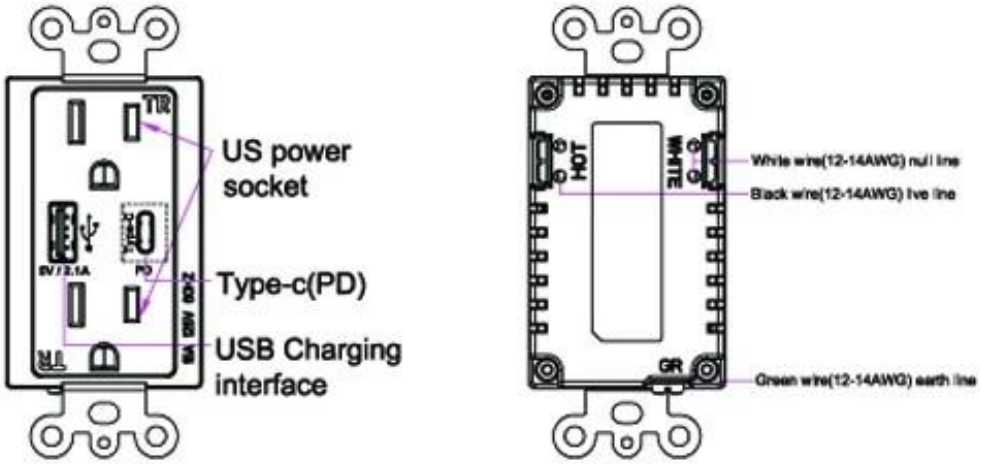

Bezoek naar: [Amerikaanse standaard USB Outlets]

Why Choose US :

Our goal is to provide customers products of high quality, competitive price, and superior services.

1.Established in 2005, about 10 years of history;

2.Own main factories, supply diversification products and One stop service

3.Certificates of ISO9001, UL, CE, EMC,CQC,RoHS,Reach,etc.

4.Six years Gold member in Alibaba, Aliexpress etc

5.Production capability more than 100 thousands pcs/ month;

6.Monthly export more than 50 times delivery;

7.Exported to more than 20 countries and regions;

8.We provide an excellent combination between prices, quality & respond,delivery,after-sales!