UK standaard USB-muuroplader Wand in stopcontact 16A 250V **met Dual USB** havens **c**harging **5V 2.1A**

UK stopcontact Charger

Producteigenschappen:

1. Shell is gemaakt van hoge kwaliteit vuurvast Materiaal, verbeteren de vlamvertraging
2. Gemaakt van fosforbrons, hoge sterkte met goede elektrische geleidbaarheid, niet gemakkelijk vervormd
3. Laad snel 2.1A USB-voedingspoorten
4. Compatibiliteit: iPod, iPhone, iPad, tablets, mobiele telefoons, smartphones, enz.
5. OEM & ODM
6. RoHS, CE

Model	XJY-USB-22	XJY-USB-22B
Size	86×86	
USB output current	2.1A/5V	
AC input parameters	100-240V/AC 50-60Hz	
Electrical output parameters	100-240V/AC 16A	
Colour	White/Black	

Specs & Omschrijving:

-AC invoerparameters: 100-250V AC 50-60Hz
-Elektrische uitgangsparameters: 100-250V AC 16A
-USB-uitgang: DC 5V 2.1A
-Grootte: 80 * 80mm & Amp; 86 * 86mm
-Color: wit / zwart

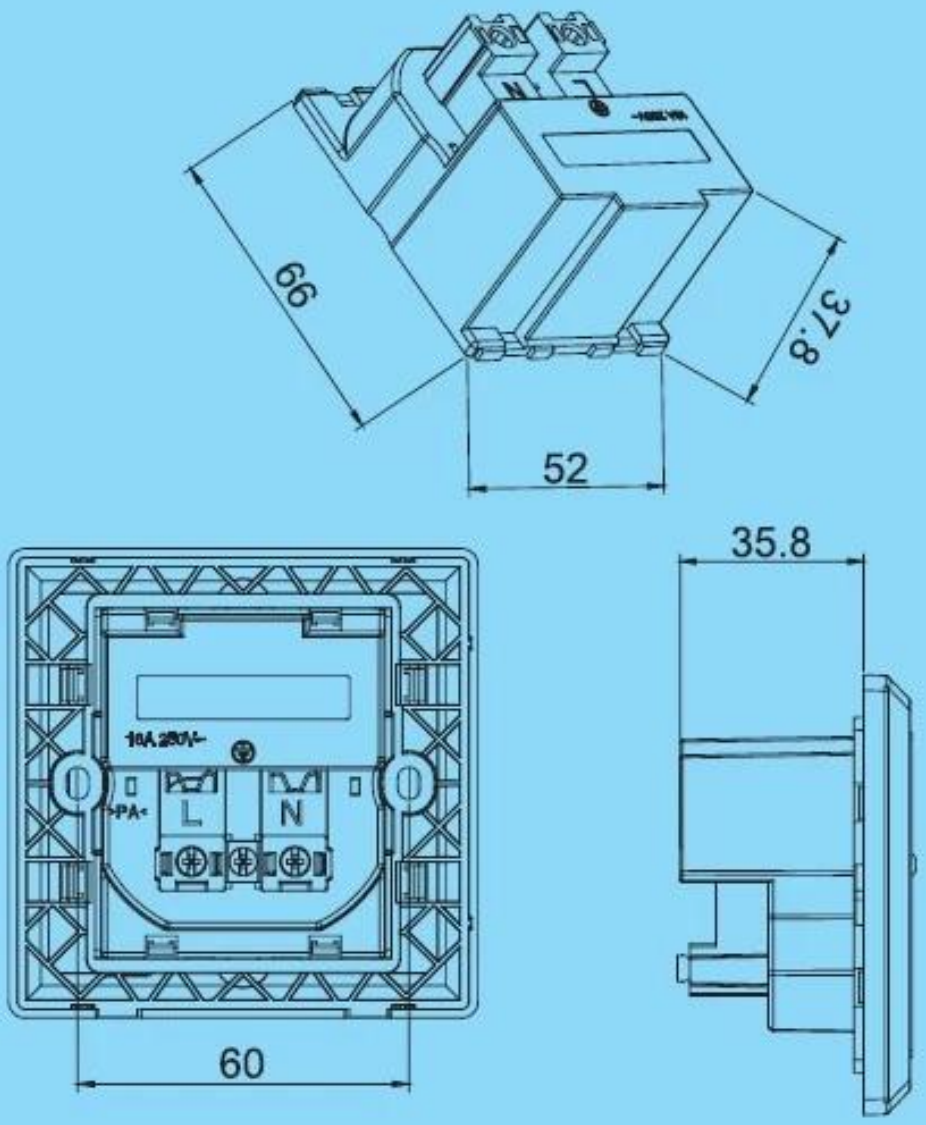

UK stopcontact Produkt verpakking:

* 1 stks / PE zak
* 500 stks / doos: 38 * 38 * 32 cm

Britse standaard USB-muuroplader

Why Choose US :

Our goal is to provide customers products of high quality, competitive price, and superior services.

1.Established in 2005, about 10 years of history;

2.Own main factories, supply diversification products and One stop service

3.Certificates of ISO9001, UL, CE, EMC,CQC,RoHS,Reach,etc.

4.Six years Gold member in Alibaba, Aliexpress etc

5.Production capability more than 100 thousands pcs/ month;

6.Monthly export more than 50 times delivery;

7.Exported to more than 20 countries and regions;

8.We provide an excellent combination between prices, quality & respond,delivery,after-sales!