Telephone cord untangler US-07L

Product Features:

* Use on handset, 360 degrees rotation to avoid handset mess and twist.
* Improve the working efficiency
* Various color available
* Extend the telephone stand by time
* Novel design with customer Logo printing.
* RoHS completed

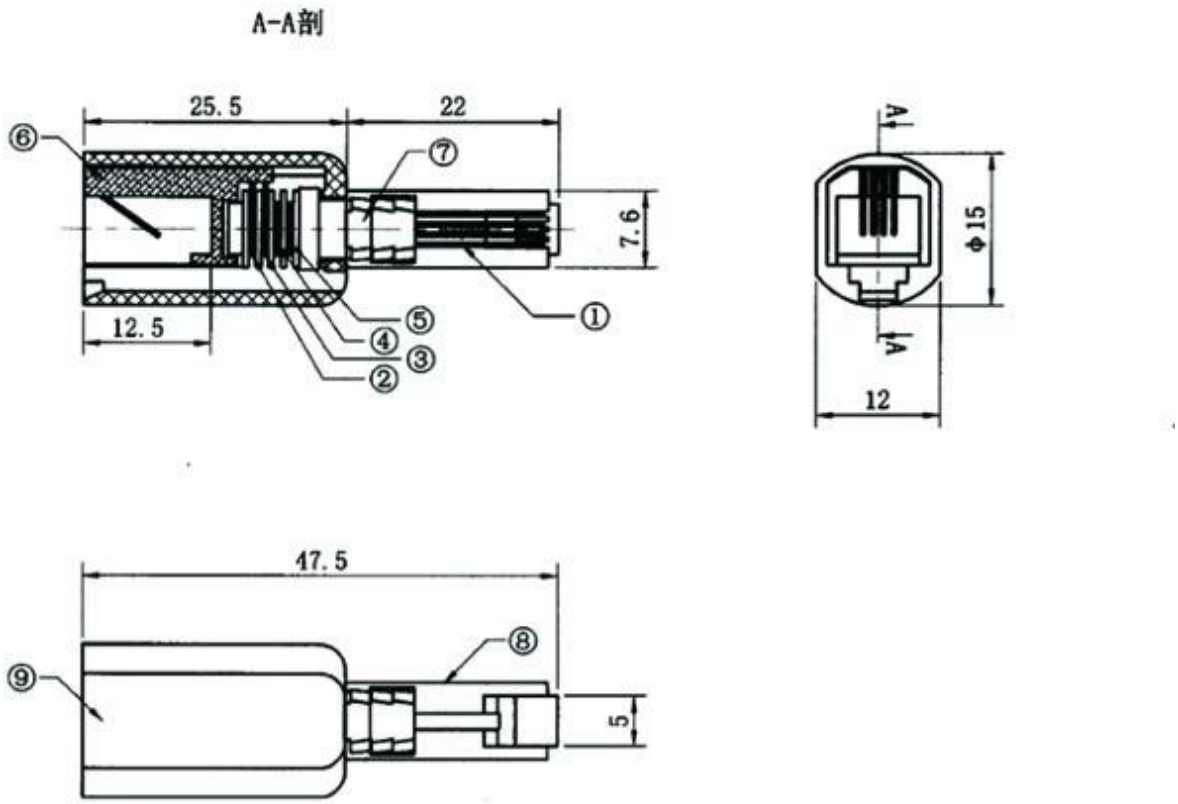

Specs& Description:

* Type: RJ11 4p4c,
* Gold plating:3u'/15u'/30u"/50u'
* Long handle length: 22mm
* Various color available
* Novel design with customer Logo printing.
* RoHS completed

Product Packaging:

* 1pcs/PE bag
* 100pcs/box
* 1000pcs/1000pcs/carton;
* Carton size: 38x28x38cm;
* N.W:7.5KG
* G.W:9.5KG

Ordering Guide:

No.	Product Photos	Model NO.	No.	Product Photos	Model NO.	Ctn size	N.W/G.W	Packing
1		SE-US07L Long Handle Length:22mm	3		SE-US-07C Wire Length:30mm	38x28x38	6.5/5.5kg	1k/ctn
2		SE-US07B Short handle Length:15.6mm	4		SE-US-06C handle Length:14.5mm	38x28x38	7.5/8.5kg	1k/ctn
5		SE-US06B Long handle Length:19.8mm	6		SE-US06 Short handle Length:15.3mm	38x28x38	7.5/8.5kg	1k/ctn
7		SE-US-81 handle Length:20.4mm	7		SE-US-81 handle Length:20.4mm	38x28x38	7.5/8.5kg	1k/ctn

Why Choose US :

Our goal is to provide customers products of high quality, competitive price, and superior services.

1.Established in 2005, about 10 years of history;

2.Own main factories, supply diversification products and One stop service

3.Certificates of ISO9001, UL, CE, EMC,CQC,RoHS,Reach,etc.

4.Six years Gold member in Alibaba, Aliexpress etc

5.Production capability more than 100 thousands pcs/ month;

6.Monthly export more than 50 times delivery;

7.Exported to more than 20 countries and regions;

8.We provide an excellent combination between prices, quality & respond,delivery,after-sales!